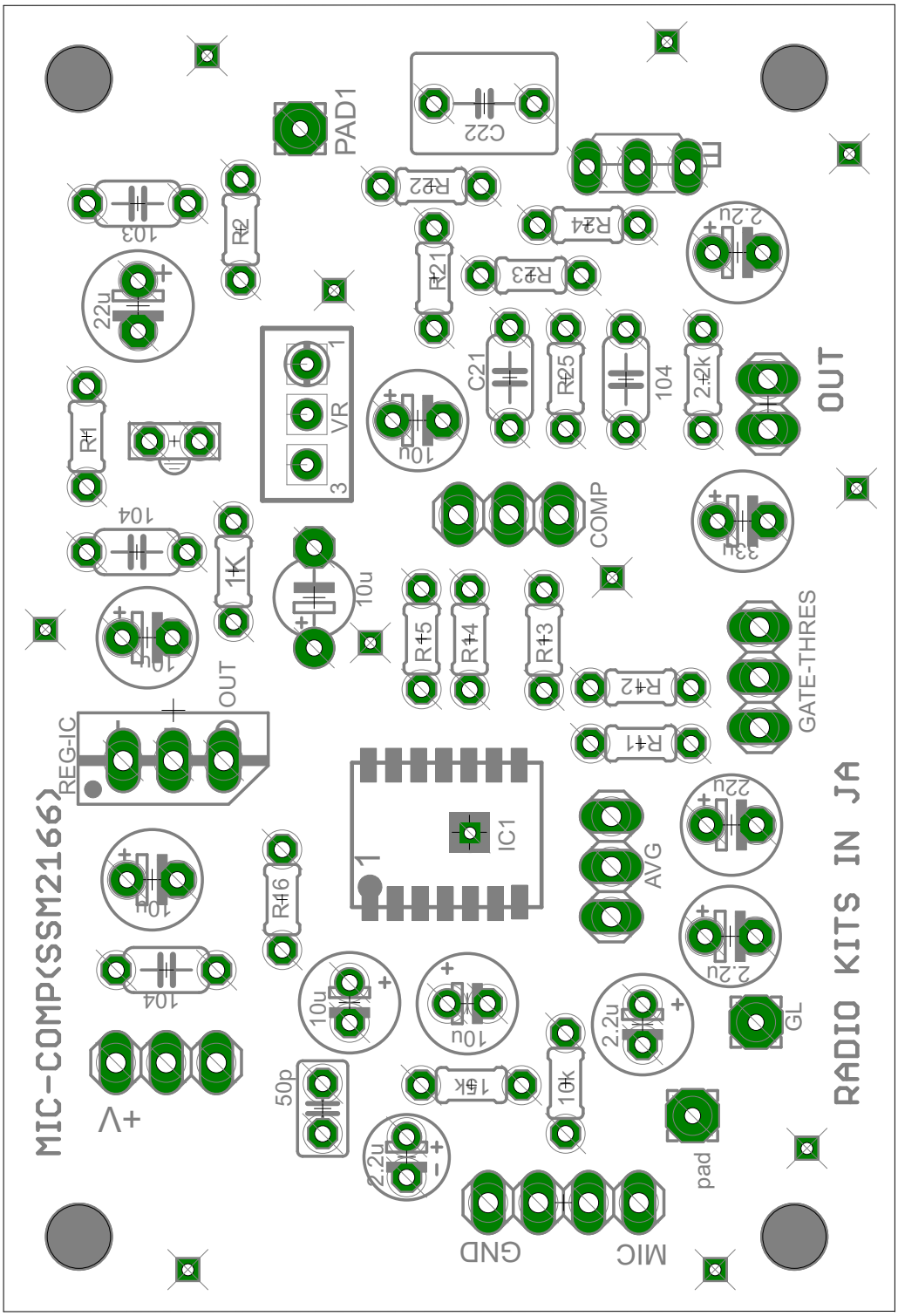

2017/12/09 7:11:29 f=3.00 D:\TOOL5\EAGLE-7.0.0\good-pcb\SSM2166-LPF(0930)\ssm2166-LPF.brd