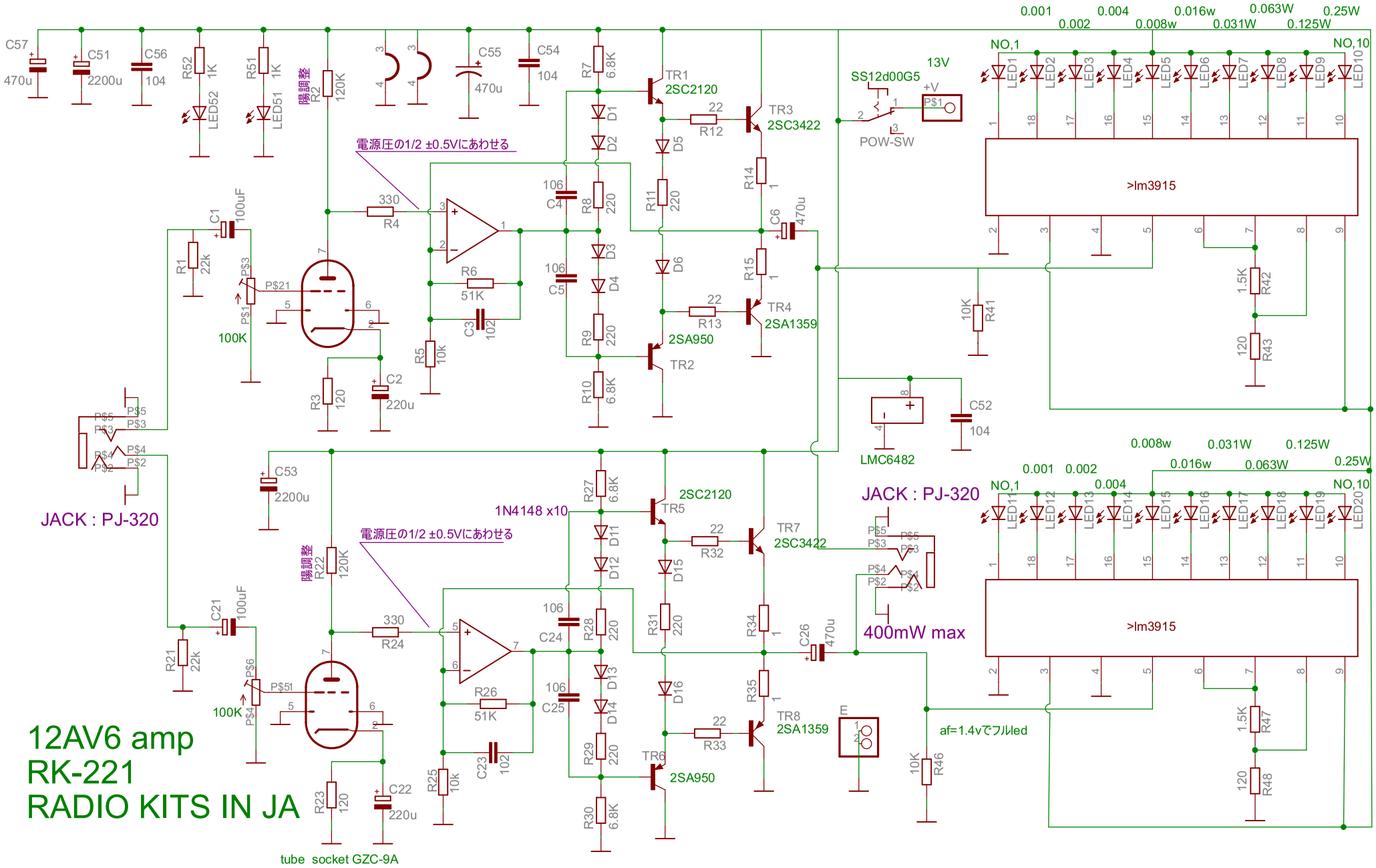

op amp :lmc6482 or 5532
入力を上げていくとop ampが電圧の壁で飽和しはじめるのでRAIL TO RAIL を推奨

R7,R10,R27,R30は3.6K時に終段温度72度前後で熱平衡(0.7A供給)

2023/07/09 9:10:52 D:\TOOL5\EAGLE-7.0.0\good-pcb\SEPP AMP\真空管\12av6 LED NEW RK221ok\12av6 led new.sch (